EED101 Introduction to Electrical Engineering
(spring 2017)
Mid semester Examination

Enrollment Number: | | | | | | | | | | | |

Name: _____

Department: _____

Instructions:

1. Fill your answers in the answer book at appropriate spaces ONLY.
2. Answers must be clearly written with distinct identifier.
3. Duration of the Exam is 2 hours.
4. Step marking wherever admissible will be considered and the decision of the instructor is final.
5. **Answers must be correct to TWO decimal places.**
6. **Answers must be accompanied by proper UNITS**
7. **Answers in complex must be finally represented in POLAR form.**
8. Follow the notations as given in the answer sheet only.

Students Signature _____ Invigilators Signature: _____

Question Number	Marks
1	
2	
3	
4	
5	
Total	

Instructor Signature: _____

1. Determine the voltage V_0 in the circuit below:

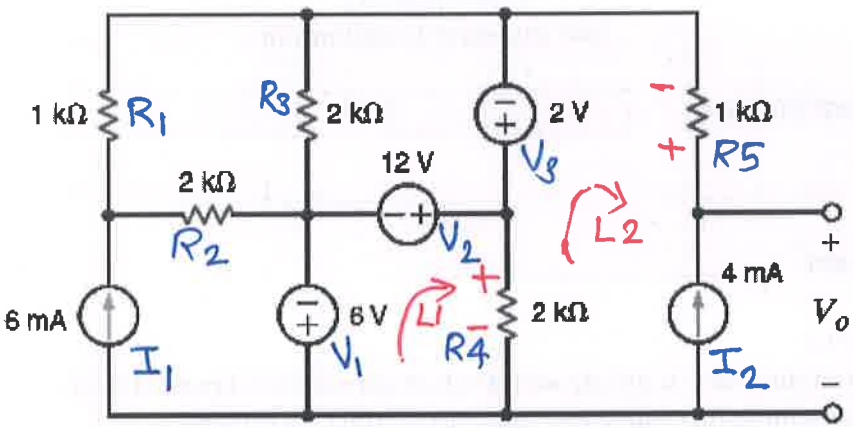

KVL in L1: $-V_1 + V_2 - V_{R4} = 0$.

$V_{R4} = 12 - 6 = 6V$

KVL in L2: $+V_{R4} - V_3 + V_{R5} - V_0 = 0$.

$+6V - 2V + (I_2 R_5) - V_0 = 0$

$V_0 = -2 + 6 + 4V = 8V$

$V_0 = 8V$

$V_0 =$ 8V

2. Determine R_T in the network below:

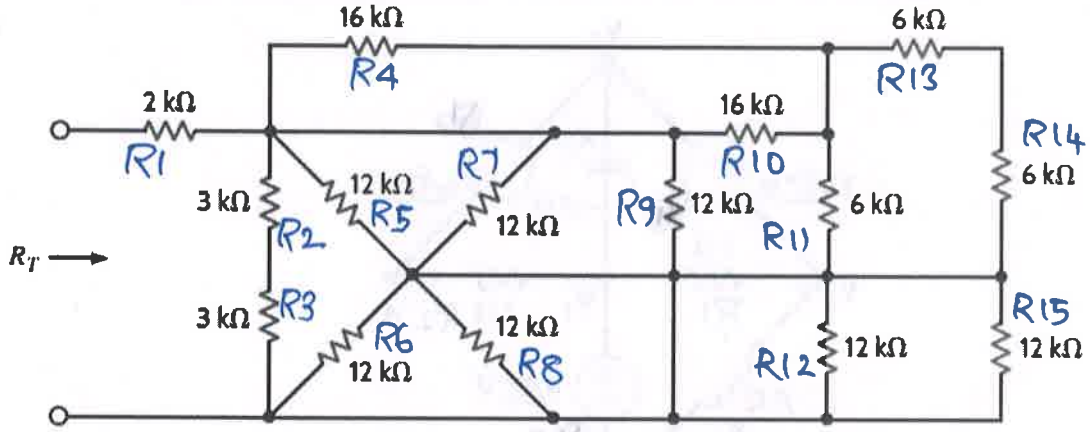

The equivalent resistance equation is

$$R_T = \frac{\left\{\left[(R_{14}+R_{13}) \parallel R_{11} + (R_4 \parallel R_{10})\right] \parallel R_9 \parallel R_7 \parallel R_5 \parallel \left[R_2+R_3\right]\right\}}{+R1}$$

$R_T =$ 4Ω

3. Simplify the circuit below to a Thevenin's equivalent circuit:

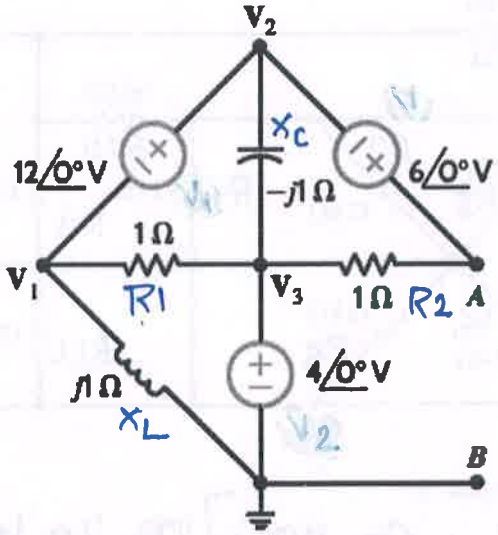

~~Mesh~~/Nodal Equation: (Strike out whichever is not applicable)

Combining $V_1, V_2, V_A \Rightarrow$

$$V_1\left(\frac{1}{1}+\frac{1}{j1}\right)-V_3(1)+V_2\left(\frac{1}{-j1}\right)-V_3\left(\frac{1}{-j1}\right)+V_A(1)-V_3=0.$$

$$\cancel{V_3(1-j)-V_3(1)+V_2(i)-V_3(i)-V_3+V_A=0}$$

Other associated equations to solve (if any)

$$V_2-V_1=12V \Rightarrow V_2=12+V_1$$

$$V_A-V_2=6V. \Rightarrow V_A=6+12+V_1=18+V_1$$

$$V_3=4$$

$$4(1-j)-4\times2+12i+V_1(i)-4i-4+18+V_1=0.$$

$$V_1(1+i)+4-4j-8+12i-4i-4+18=0$$

$$V_1(1+i)+(10+4i)=0.$$

$$V_1=-7+3i$$

$$V_A=18-7+3i=11+3i$$

$$V_A=11.4V\angle 15.25^\circ V.$$

KCL @ V_1, V_2 & V_A.

$$V\left(\frac{1}{1}+\frac{1}{j1}\right)-V_3\left(\frac{1}{1}\right)+V_2\left(\frac{1}{-j1}\right)-V_3\left(\frac{1}{-j1}\right)+V_A\left(\frac{1}{1}\right)-V_3\left(\frac{1}{1}\right)=0$$

$V_2-V_1=12V \Rightarrow V_1=V_2-12V$

$V_A-V_2=6V \Rightarrow V_A=6+V_2$

$V_3=4\angle 0^\circ V$

$$V_1(1-j1)-2V_3+V_2(i)-V_3(i)+V_A=0$$

$$(V_2-12)(1-j1)-8+V_2(i)-4i+(6+V_2)=0$$

$$V_2(1-j)-12(1-j)-8+V_2(i)-4i+(6+V_2)=0$$

$$V_2-\cancel{V_2(j)}-12(1-j)-8+\cancel{V_2(i)}+6+V_2-4i=0.$$

$$2V_2-14+8j=0.$$

$$V_2=7-4j=8.06\angle -29.7\,V.$$

$$V_A=13-4j=13.6\angle -17.1\,V.$$

$\boxed{V_{Th}=\cancel{11.4\angle 15.25^\circ}}$ $13.6\angle -17.1\,V$.

Z_{TH}:

Equivalent Circuit to determine Z_{Th}:

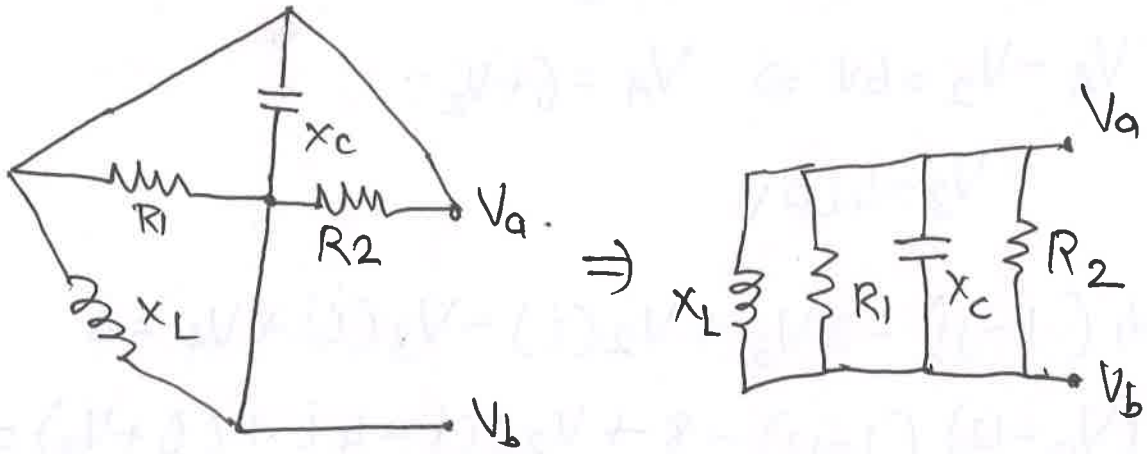

$$\frac{1}{Z_{Th}} = \frac{1}{j1} + \frac{1}{1} + \frac{1}{-j1} + \frac{1}{1}$$

$$\frac{1}{Z_{Th}} = \frac{1}{2}\,2$$

$$Z_{Th} = 0.5\,\Omega.$$

Thevenin Equivalent Circuit

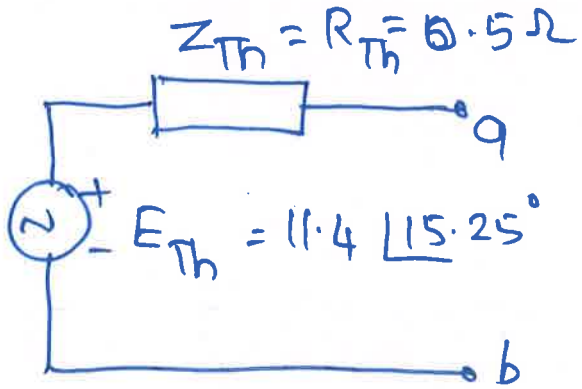

$Z_{Th} = 0 \cdot 5$

4. Apply Superposition theorem to determine the voltage V_0 in the circuit below:

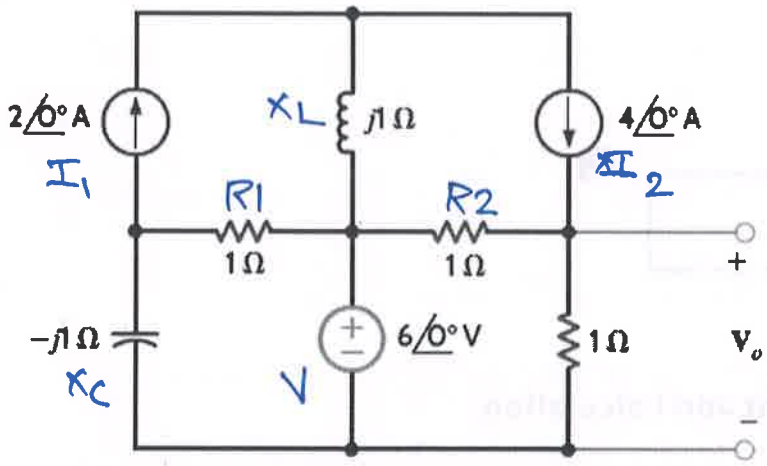

(i)2∠0 A: Circuit and Calculation:

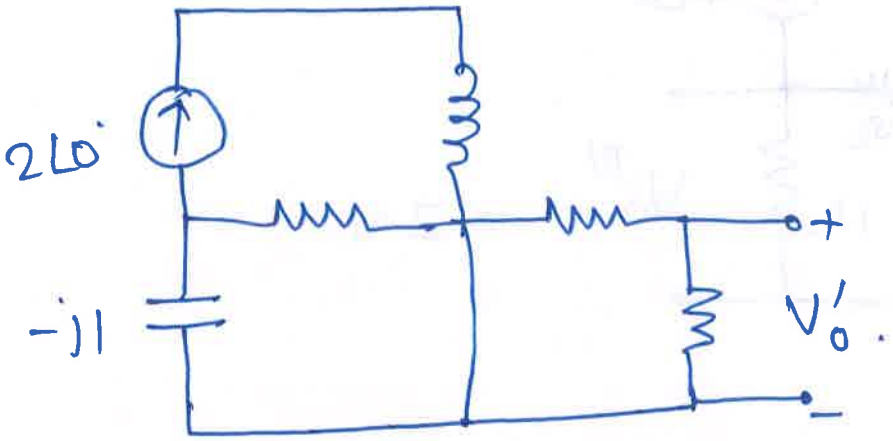

$V_0' = 0.$

$V_0' =$ 0 V

(ii) 6∠0 V: Circuit and Calculation:

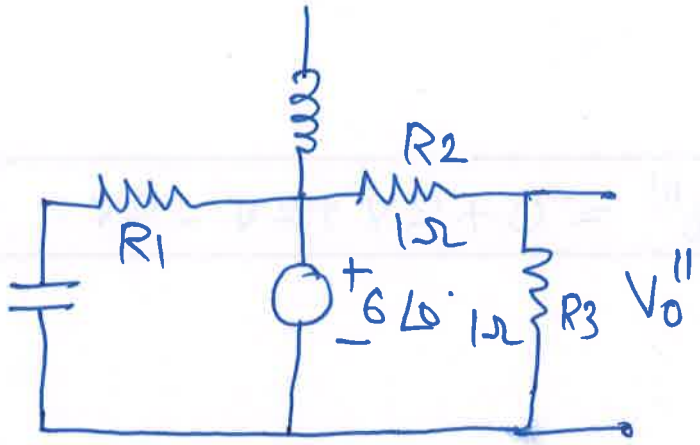

$V_0'' = 3V.$

$V_0'' =$ 3V

(iii) $4\angle 0\ A$: Circuit and Calculation:

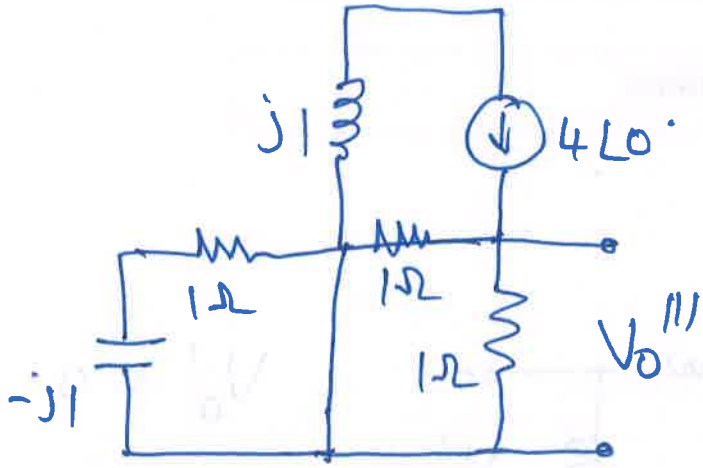

$V_0''' = 2V$.

$V_0''' =$ 2V

$V_0 = V_0' + V_0'' + V_0''' = 0 + 3V + 2V = 5V.$

5.

a. Write the mesh equations for the network of Fig. below using the format approach to mesh analysis.
b. Use determinants to determine the mesh currents.
c. Find the voltages V_a and V_b
d. Determine the voltage V_{ab}.

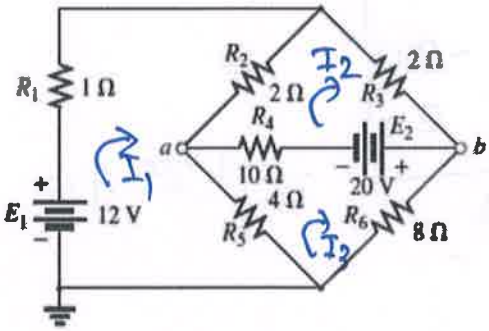

a. Mesh Equations:

$$[7][I_1] - 2I_2 - 4I_3 = 12$$

$$-2I_1 + 14I_2 - 10I_3 = -20$$

$$-4I_1 - 10I_3 + \overset{22}{\cancel{14}}I_3 = 20V.$$

b. Mesh Currents:

$$\Delta = \begin{vmatrix} 7 & -2 & -4 \\ -2 & 14 & -10 \\ -4 & -10 & 22 \end{vmatrix} = 984$$

$$I_1 = \frac{\begin{vmatrix} 12 & -2 & -4 \\ -20 & 14 & -10 \\ 20 & -10 & 22 \end{vmatrix}}{\Delta} = \frac{2336}{984} = 2.37A.$$

$$I_2 = \frac{\begin{vmatrix} 7 & +12 & -4 \\ -2 & -20 & -10 \\ -4 & +20 & 22 \end{vmatrix}}{\Delta} = -0.195A.$$

$$I_3 = \frac{\begin{vmatrix} 7 & -2 & 12 \\ -2 & 14 & -20 \\ -4 & -10 & 20 \end{vmatrix}}{\Delta} = 1.25A.$$

$I_1 =$ 2.37A, $I_2 =$ −0.195, $I_3 =$ 1.25A.

c) $V_a = (I_1 - I_3)R_5 = (2.37 - 1.25) \times 4 = \cancel{5V}\ 4.48V$

$V_b = (I_3 R_6) = 1.25 \times 8 = 10V$

$V_a =$ 4.48V
$V_b =$ 10V

$V_{ab} = 4.48 - 10 = -5.52V.$